Portable power station
User Manual

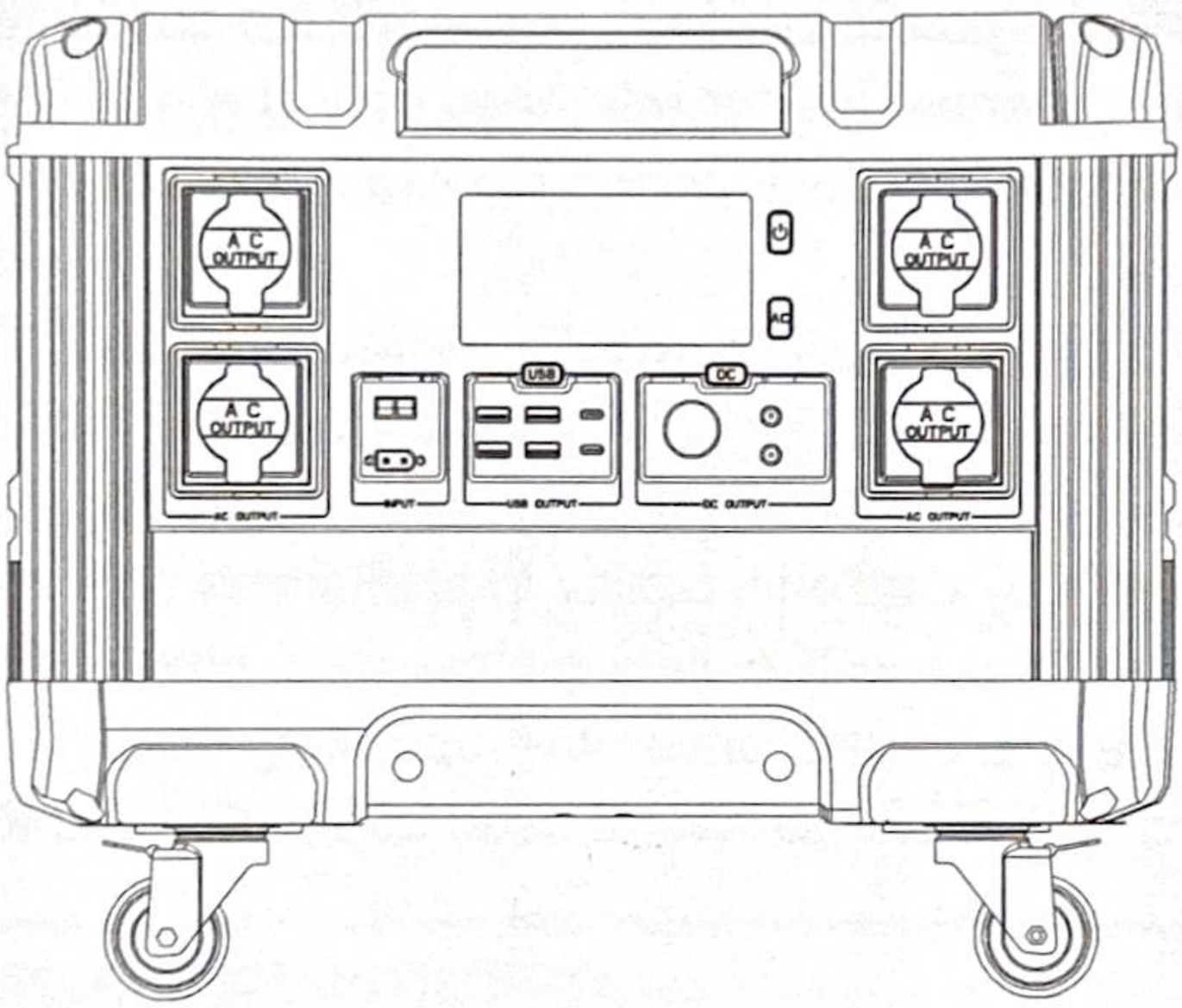

IMPORTANT! This product manual is a general version of 3000W portable energy storage power supply. The actual specifications and parameters of the product, especially the specifications and voltage of AC output socket, will be customized according to different countries, regions and users. The product specification shall be subject to the actual product,

Please read this manual carefully before using this product.

About product

Thank you very much for using our multifunctional portable power station product. If experienced a power outage or need to use electricity when travel outdoors, you can use this product to power your electrical products. This power station has high-quality Lithium iron phosphate battery built-in, which supports DC USB and AC outputs. Before using this product, please read this user manual carefully and keep it properly for future reference.

Please note!

This manual is intended to assist you in the proper use of this product and does not represent any description of the software or hardware configuration of this product. For information on the configuration of the product, please refer to the contract relating to the product (if any), or consult the dealer who sold it to you. The pictures in this manual are for reference only, if any of the pictures do not correspond to the actual product, please refer to the actual product.

This power station has a built-in inverter, which provides a pure sine wave output. This waveform is consistent with the mains waveform and characteristics, and can provide pure AC power to appliances. Traditional inverters with a modified waveform may cause instability in appliances and even cause certain appliances such as those with built-in motors (e.g. electric fans, printers with motors, etc.) to make a certain amount of operating noise. This product is for emergency use only and should not be used as a substitute for normal household AC power.

Battery capacity	1680000mAh,3.2V /5376Wh
Product size (LWH)	L470*290*H545mm
Battery type	LiFePO4 batteries
Fully-charged	AC charging: 1600W MAX Solar panel: MPPT 650W 12-80V DC/8.5A Max

USB output	4 X USB 3.0: 5V~9V/2A MAX 18W 2 X Type-c Port: 5V~15V/3A 20V 5A 100W MAX
DC output power (Max.)	2x DC5521 13.5V/10A 1 x Cigar socket 13.5V/10A
AC Charging time	about 4 hours
AC output power	AC continuous output power 3000W
Battery level	LCD display
Operation temperature	-10℃-40℃
Lifetime cycle	>2500 times
Packaging accessories	1 x Portable solar generator 1 x AC line 1 x User manual

※ Note that accessories maybe different, please refer to the actual product.

Product Function Description

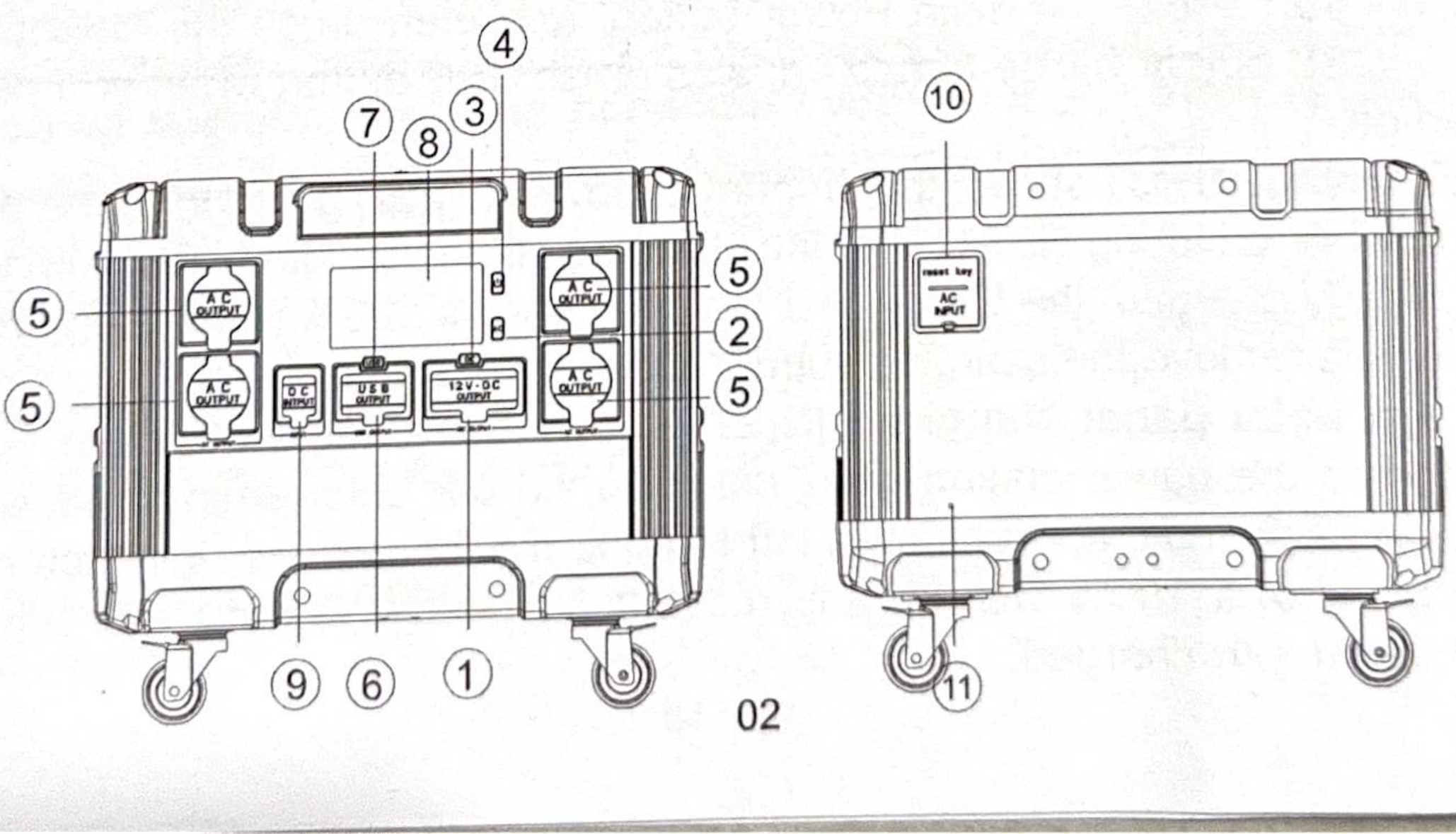

1.DC output 2. AC button 3. DC button 4. Power button
5. AC output 6. USB output 7. USB button 8. LCD display
9.DC input 10.AC input
11.Ground Terminal

LCD display

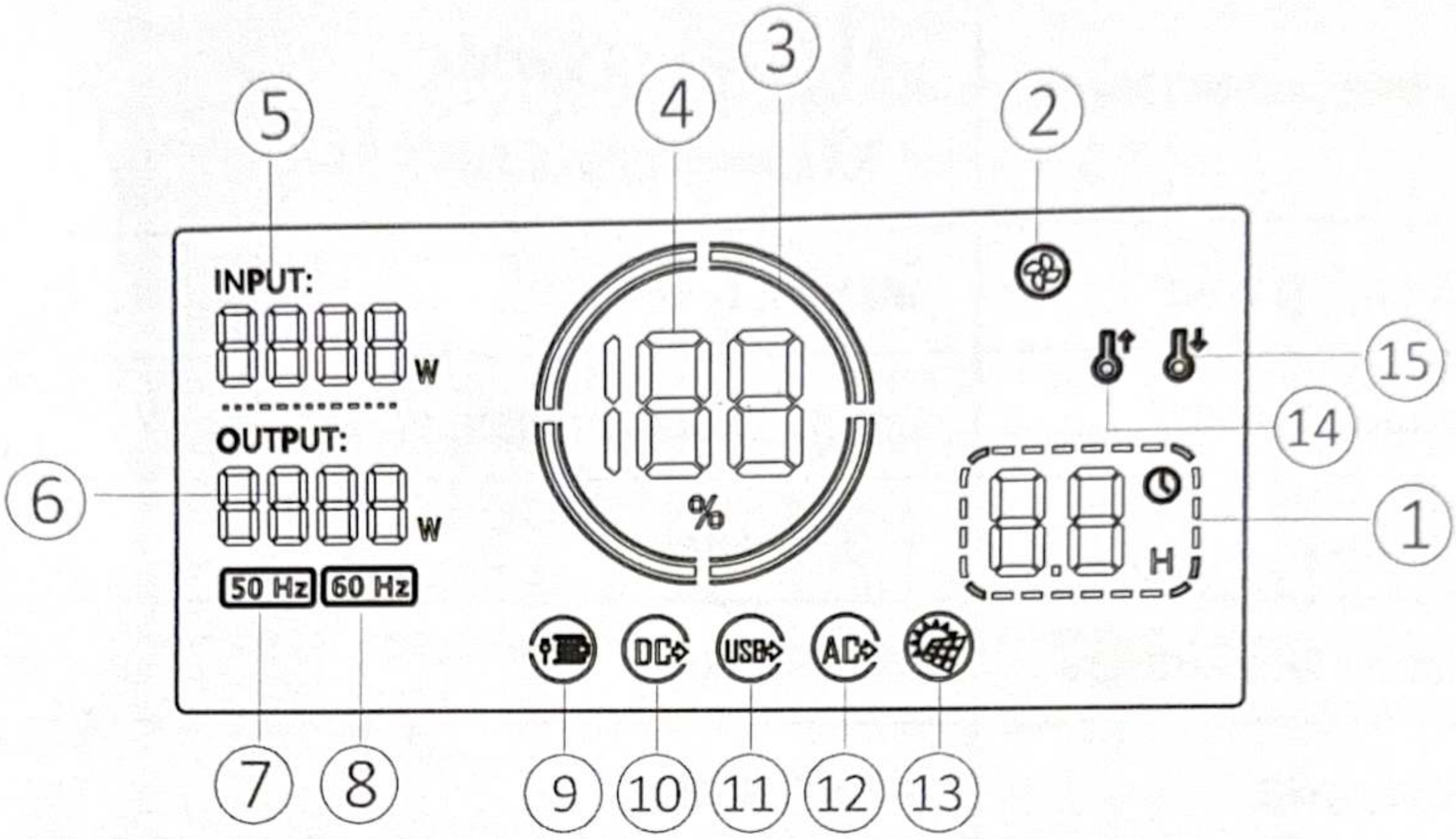

1.Remaining time 2.Fan status 3. Charge or Discharge status
4. Battery level 5. Input power 6.Output power
7. Output frequency 8. Output frequency 9. Charging
10.DC output 11.USB output 12.AC output
13.DC Input 14.High temp protection 15.Low temp protection

DC output: Press the main Power button, and then press the DC power button, DC output will be turned on; also press DC button when you need it turned off.
AC output: Press the main Power button, and then press the AC power button, AC output will be turned on; also press AC button when you need it turned off.
USB output: Press the main Power button, and then press the USB power button, USB output will be turned on; also press USB button when you need it turned off.

AC charging: INPUT shows the amount of power (watts) going in to the power station while charging via AC line, the charging circle indicator runs from left to right. If fully charged, the battery bar indicator shows 100% without any move, and please remove the charging supply after fully charged.
Car and Solar panel charging: INPUT shows the amount of power (watts) going in to the power station while charging via car charger/solar panel, the charging circle indicator runs from left to right. If fully charged, the battery bar indicator shows 100% without any move, and please remove the charging supply after fully charged.

Product instructions

1.How to use the product to power 12V electrical appliances (such as lights, CPAPs)?

A) Press the main Power button, and then press the DC power button, DC output will be turned on.

B) Please confirm if the 12V electrical appliance interface is DC5521 male specification type (outer diameter: 5.5mm, inner diameter: 2.1mm), otherwise it is not possible to plug your devices to the DC ports. Also you can consult the manufacturer to buy the corresponding connector to make it worked.

C) If car charging supported, power the vehicle devices through plugging the device to the cigar lighter port.

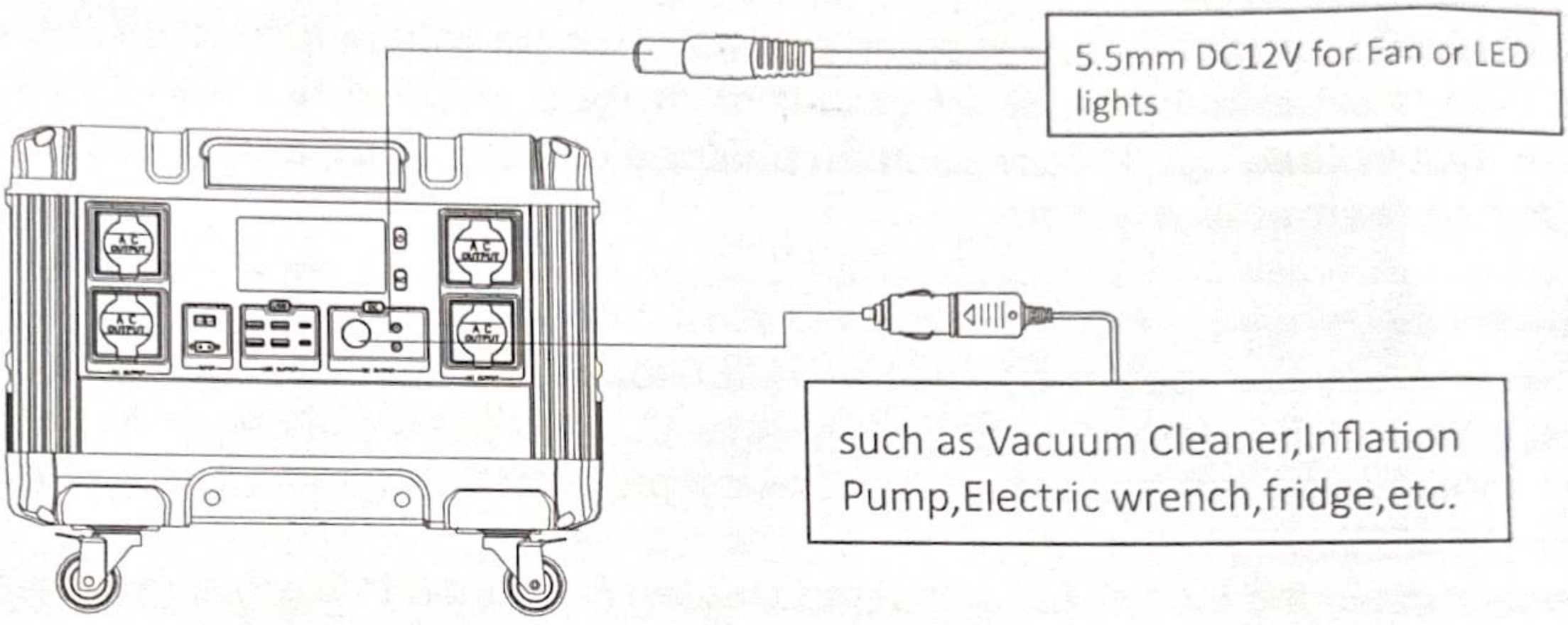

DC protection mode:

Short-circuit and Over-load protection: the machine will be turned off if the DC output experiences a short circuit or outputs exceed the max power (over 135W loading). Please remove the load of DC output, and restart DC button to restore to normal.

2.How to use the product to power AC electrical appliances ?

A)Connect the provided AC line interface to the AC Input port of the machine.

Warning: Different countries have different interface specifications and voltage standards. Before use it, it is necessary to carefully check whether the product specifications are consistent with your electrical appliances specifications, otherwise it may cause dangerous situations.

B)Press the main Power button, and then press the AC power button, AC output will be turned on.

AC output turns on to work when AC letters light on the LCD display and show the amount of power (watts) the device using.

C)Press AC button when you need it turned off.

When not using AC output ports, please remember to turn AC button off to conserve power.

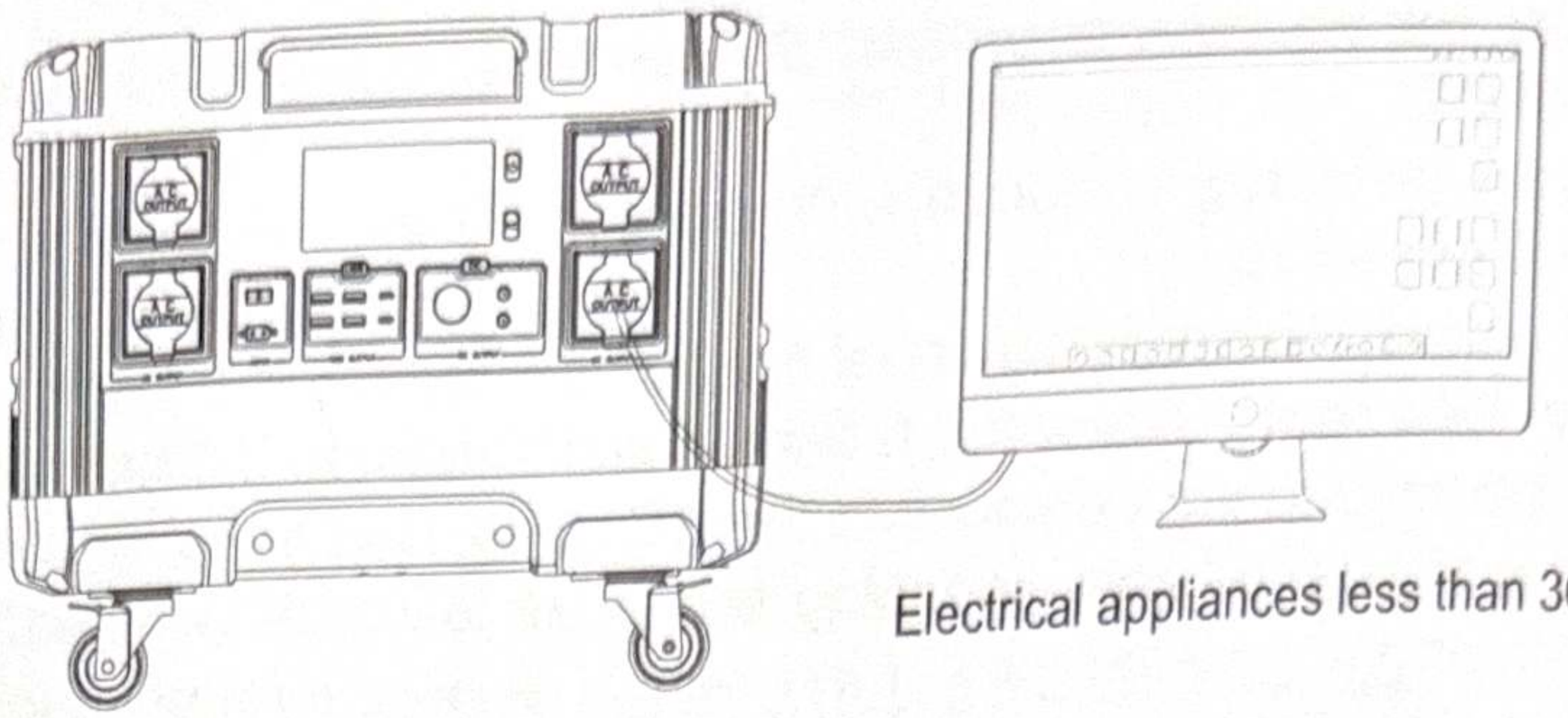

Electrical appliances less than 3000W

AC protection mode:
Short-circuit and Over-load protection: the machine will be turned off if the AC output experiences a short circuit or outputs exceed the max power (over 3000W loading). Please remove the load of AC output, and restart AC button to restore to normal.

Attention:
A) Some electrical appliances such as refrigerators, ice makers, laser printer, lights, etc. require start-up power to operate, this is usually only needed for a very short period; but it may cause over-load protection when the peak power exceed 3000W.
Please remove the load of AC output, and restart AC button to restore to normal.

B) When using UPS function (AC output discharge while charging at the same time), the max load of AC out put should not exceed 1600W. For safety reasons, it is better to use the load less than 1300W.

C) The UPS switching time is about 10ms. While using the UPS function (AC charging), bare metal or electrical appliances with bare metal should not be used, and the AC output port should not be short circuited, otherwise there is a risk of electric shock and personal injury.

3)How to provide power for USB digital appliances with this product.
A) Plug your devices into corresponding USB and Type-C ports.
B) Press the main Power button, and then press the USB power button, USB output will be turned on.
C) This product supports fast charging USB3.0 output technology, which can power some USB devices with fast charging function very quickly. The actual charging voltage and current are related to the actual USB smart device. Please refer to the actual devices specifications.

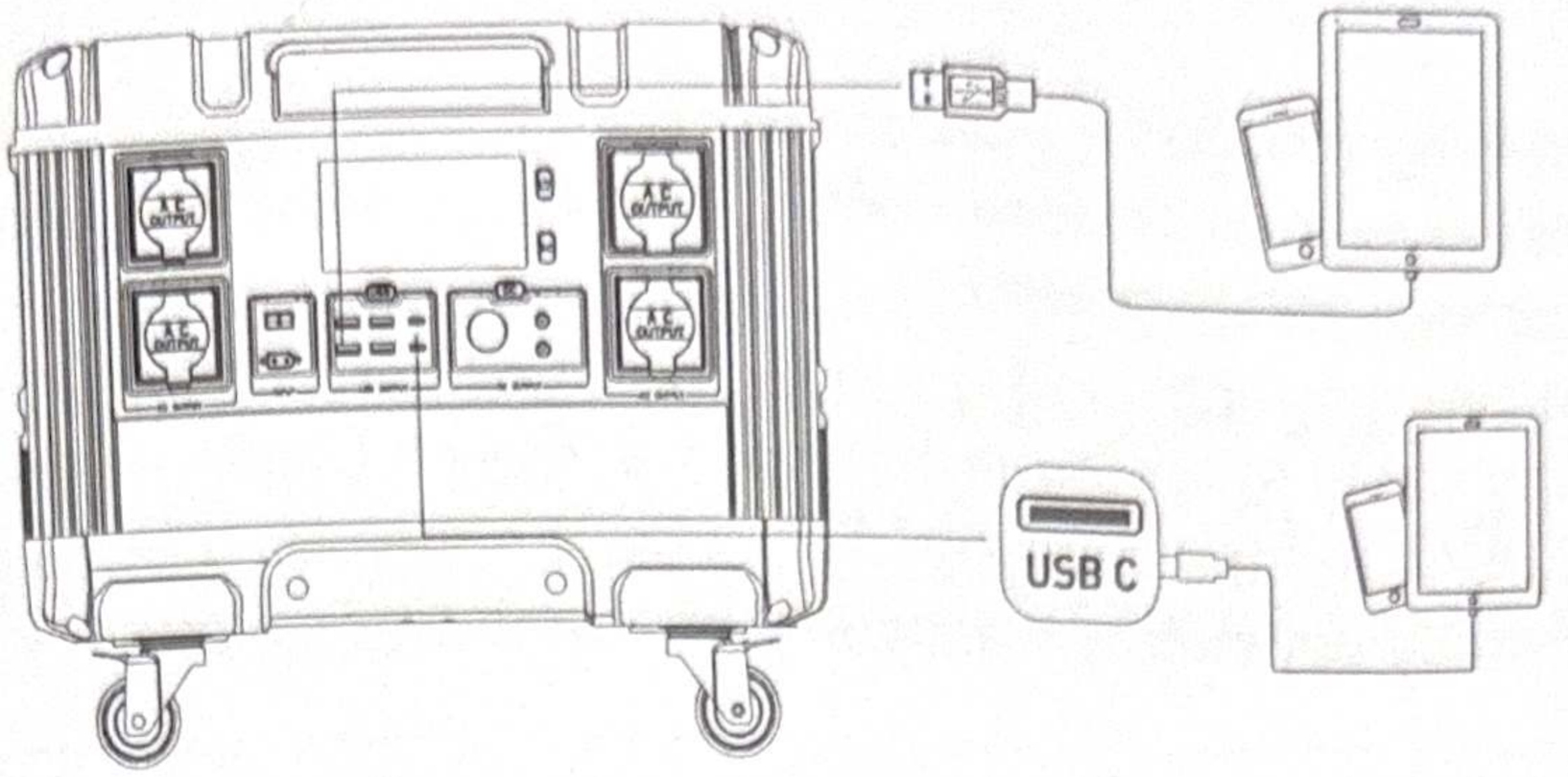

Short-circuit and Over-load protection: the machine will be turned off when expe-riencing short-circuit or over-load situations. Please remove the load of USB output, and restart USB button to restore to normal.

4). How to charge this unit

1. AC charging

Using the included AC line to plug into the home mains port, and then connect the interface to the AC input port.

INPUT shows the amount of power (watts) going in to the power station while charging via AC line, the charging circle indicator runs from left to right. If fully charged, the battery bar indicator shows 100% without any move, and please remove the charging supply after fully charged.

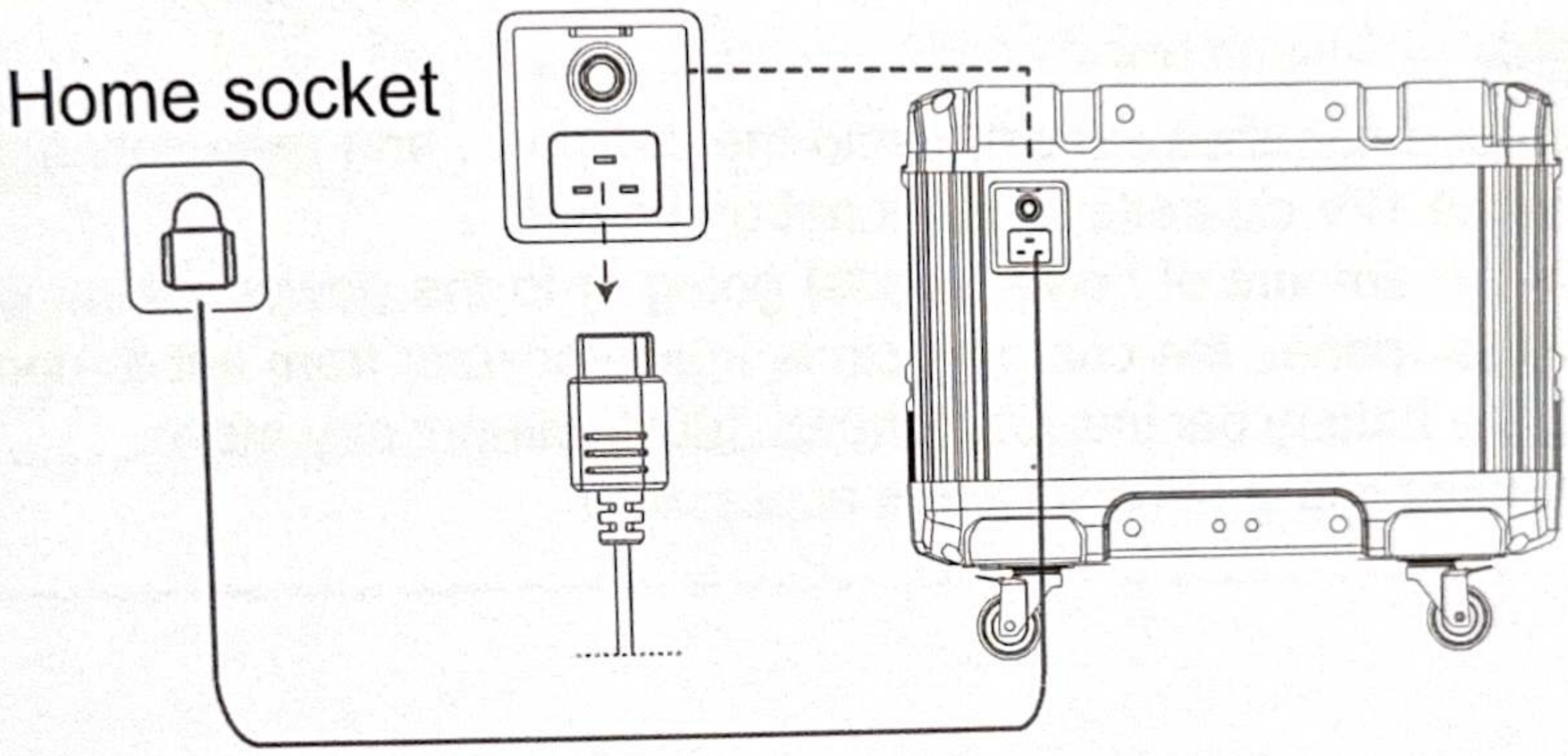

2.Solar panel charging

1)Place your solar panel where it will get as much direct sunlight as possible.

2)Plug the output of the solar panel into the DC input of the unit to start charging. INPUT shows the amount of power (watts) going in to the power station while charging via solar panel, the charging circle indicator runs from left to right. If fully charged, the battery bar indicator shows 100% without any move.

3)The charging time of the solar panel is related to the actual sunlight intensity (the solar panel is not a standard accessory)

4)The max charging voltage for solar panels is 80V, and the max current is 8.5A. It is not allowed to exceed the max current or voltage, otherwise it may damage the product or cause safety accidents.

Use approved charging cables plug into the DC input port （XT60 or Anderson ） and connect the cable to an DC power source. Check battery segments in the BATTERY DISPLAY are the charging circle indicator runs from left to right. If fully charged, the battery bar indicator shows 100% without any move.

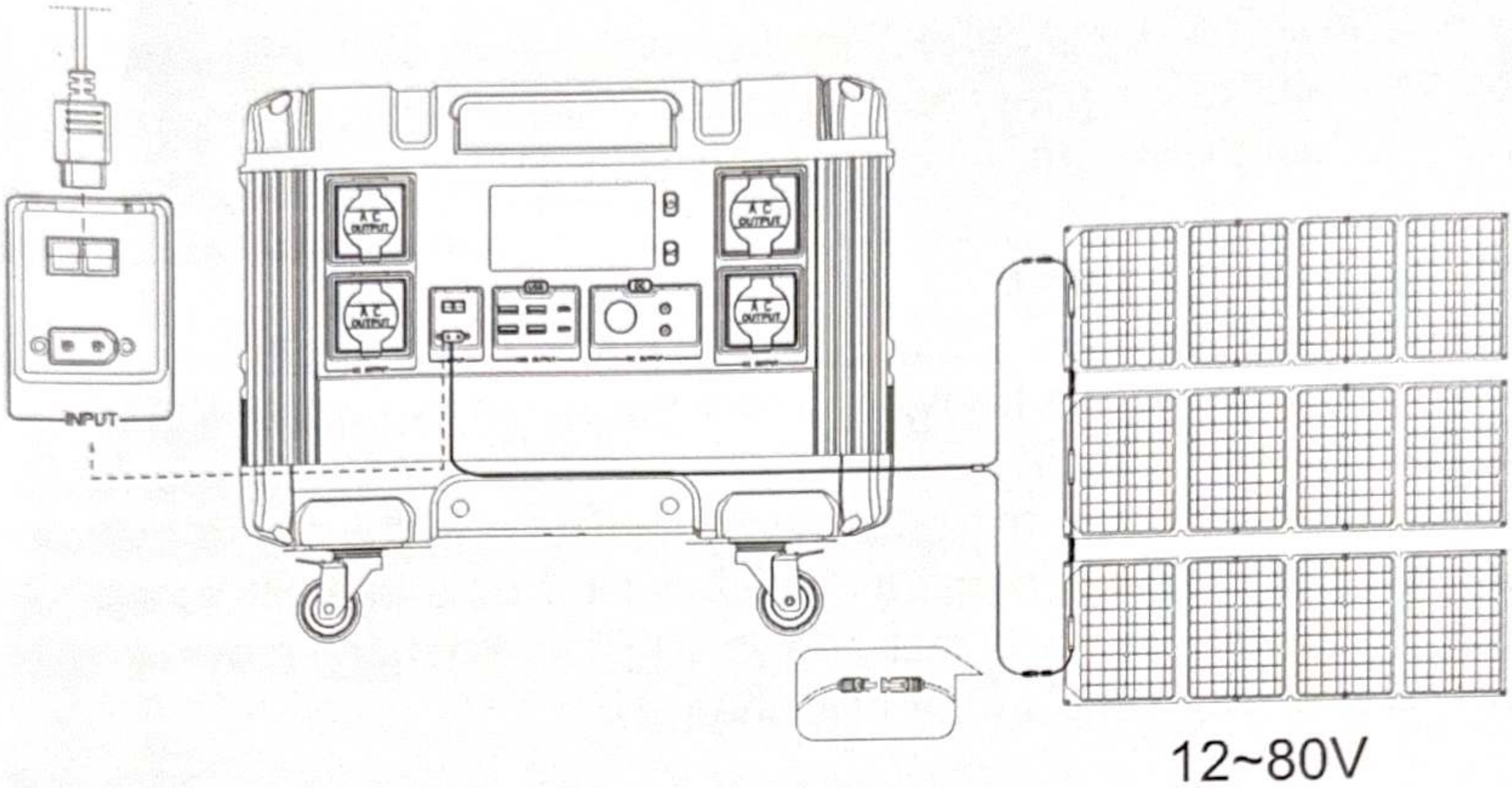

3.Car charging

Using the included car charging cable into the car port , and then connect the charging tip to the 12V cigarette lighter input of the unit.

INPUT shows the amount of power (watts) going in to the power station while charging via solar panel, the charging circle indicator runs from left to right. If fully charged, the battery bar indicator shows 100% without any move.

（The car charging line is not a standard accessory）

Wheels Instruction for Use

1. Wheels can rotate 360 degrees. When moving the product, make sure that the brake pads of all four wheels are open and all four wheels must land simultaneously on the ground. Please do not use only two wheels to drag the product on the ground, otherwise it may destroy the product.
2. Please close the brake pads of the wheels when product in storage or transportation, keep the product in a fixed position.
3. The product has limited load bearing capacity, please do not place heavy objects on the product, even let people sit on it which can cause accidents.

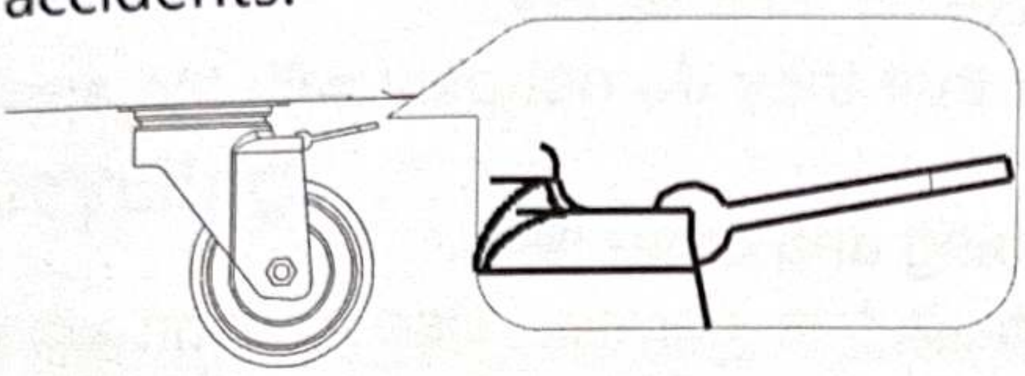

The brake pads upward:
Which are open to make the product movable.

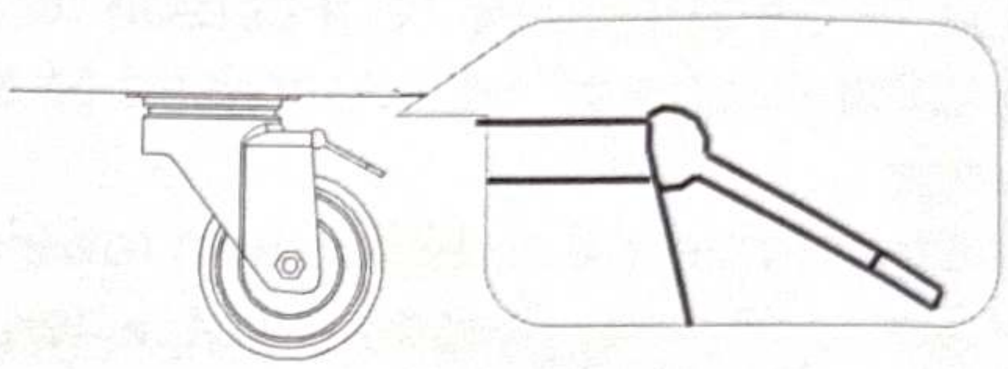

The brake pads downward:
Which are closed to make the product unmovable.

Security and maintenance

A.Do not short-circuit the unit. To avoid short-circuiting, keep the unit away from all metal objects (e.g. coins, hair-pins, keys, etc.).
B.Do not heat the unit, or dispose of it in fire, water or other liquids.
C.Keep away from high temperatures.
D.Do not expose the unit to direct sunlight.
E.Keep away from high humidity, dusty places.
F.Do not disassemble or reassemble this unit.
G.Do not drop, place heavy objects on, or allow strong impact to this unit.
H.This appliance is not intended for use by persons (including children) with reduced physical, sensory or mental capabilities, or lack of experience and knowledge, unless they have been given supervision or instruction concerning use of the appliance by a person responsible for their safety.
I.Children should be supervised to ensure that they do not play with the appliance.
J.Do not cover the device with towels, clothing and other item.
K.The unit may become hot when charging,it is normal. Use caution when handling.
L.Use the unit properly to avoid electronic shock.
M.Please deal with scrap products in accordance with the regulations, do not treatment the built-in battery as a household garbage, so as not to cause the explosion and pollution.
N.The product is only used for emergency power station, it can not replace the standard DC or AC power of household appliances or digital products.

O.No short-circuit or touching AC output ports of the unit to avoid electronic shock when using UPS function.

Product application skills

A.This product is high quality LiFeO4 batteries built-in with large capacity and long durability. However we still advise customers to use it between 10℃~30℃ to gain the best battery capacity.
B.When charging, in order to avoid interference, please stay away from TV, radio and other equipment.
C.If the device has not been used for a long time, please disconnect the cable and store it.
D.Some portable devices may need to be set in charging mode to charge, read the use manual of the corresponding equipment for more information
E.In order to extend the life of product (lithium battery), it is better to charge within 3 months, and charge at least once within 6 months.

Recycling

Be sure to deliver discarded electronics, batteries and packaging materials to special recycling centers. Do not dispose of in trash. This can help handle uncontrolled waste and promote material recovery.

Battery information

This unit has non-removable rechargeable batteries. Do not attempt to remove the battery. The battery can be charge and discharged over 2500 times, but it will eventually wear out.

Statement

All rights reserved. Reproduction in whole or part without written permission is prohibited. All other trademarks or registered trademarks are belong to their respective owners. Features and specifications subject to change without notice.