Portable Power Station

USER MANUAL V3.0

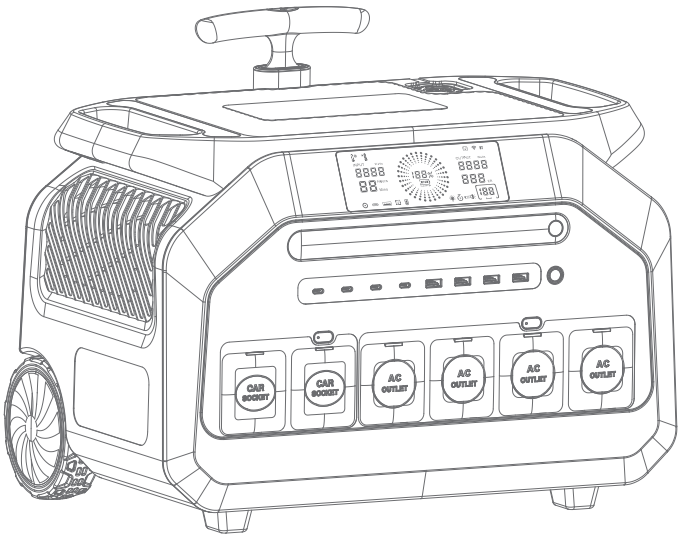

Model: P3200

WARNING

1. Please keep dry and stay away from fire.
2. Do not disassemble, puncture or squeeze the portable power station.
3. Please recycle and dispose of the product in accordance with local laws and regulations.
4. Please hand it over to a professional recycling company to dispose this portable power station.
5. Children and the disabled please use this product with guardian.

CONTENTS

Get to Know Your Product ---- 03
Charging Your Product ---- 04
Using Your Product ---- 07
Product Specifications ---- 12
Product Error Code ---- 13
Package Content ---- 15
Caution ---- 15
Cold Weather Usage ---- 15
Disposal And Recycle ---- 16
Disclaimer ---- 16

Glad you're using this portable Power Station, before starting using this product, please read the instructions carefully!

⚠ Attention

- Specifications and images in this manual are for reference only.
- This product is for emergency use only, it is not a standard replacement for normal AC house power. Actual AC outlets could be different depending on the location of the customer.
- Fully charge the product before using it for the first time.

Get to Know Your Product

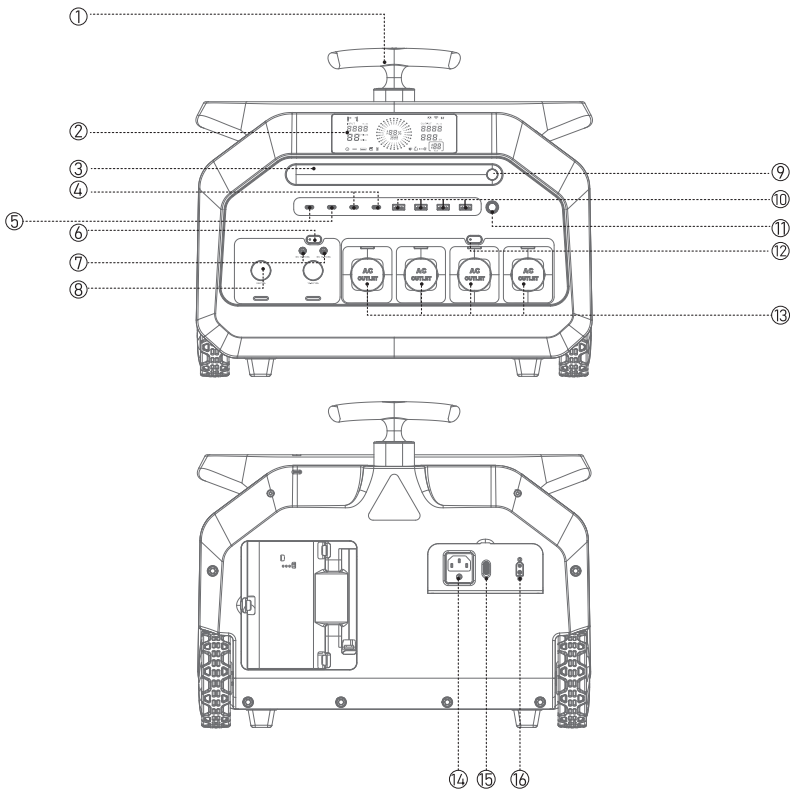

① Handle
② LCD Display
③ LED
④ PD 30W TYPE-C Output Port
⑤ PD 100W TYPE-C Output Port
⑥ DC ON/OFF Switch
⑦ DC Output port
⑧ Car port
⑨ LED Button
⑩ USB-A Output Port
⑪ Power Button
⑫ AC ON/OFF Switch
⑬ AC Output Port
⑭ AC Input Port
⑮ Switch
⑯ DC Input Port(XT60i)

Charging Your Product

ATTENTION

If either the room (ambient) temperature or the temperature of the battery gets too high, the battery charging circuit will automatically shut down. When the temperature falls below 122 degrees °F (50 degrees °C), the battery will automatically resume charging. If it is not used for a long time, it is best to fully charge it every three months before storing it. If it has not been used for half of a year, please fully charge the product before use. It is best to fully charge each charge.

LCD Battery Display

The screen will display the remaining charging time and the percentage of battery power level. When the percentage of power level is 100% and the charging power is 0, the product is fully charged.

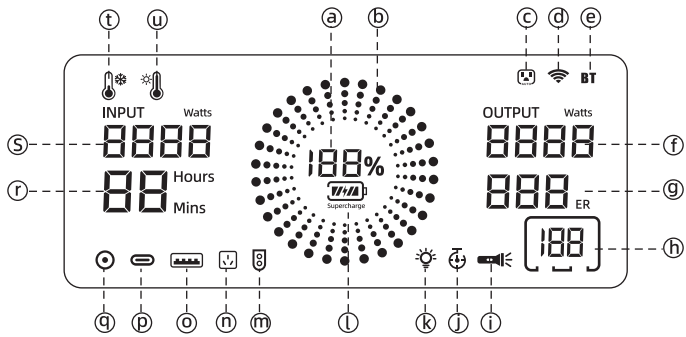

ⓐ 88%	Battery Power Level %	ⓗ	AC output frequency	ⓞ	USB-A Output
ⓑ	Battery Power Level	ⓘ	Flashlight	ⓟ	Type-C Output
ⓒ Auto	AC automatically shuts off	ⓙ	Smart Power Mode	ⓠ	DC Output
ⓓ	WIFI	ⓚ	LED	ⓡ 88 Hours Mins	Remaining Usage Time/ Remaining charging Time
ⓔ BT	Bluetooth	ⓛ	Fast Charging	ⓢ INPUT Watts 8888	Iuput Power
ⓕ OUTPUT Watts 8888	Output Power	ⓜ	Solar Panel Input	ⓣ	Low temperature protection
ⓖ 888 ER	AC output voltage and error codes	ⓝ	AC Input	ⓤ	Over temperature protection

1. Charge Through Solar Panel

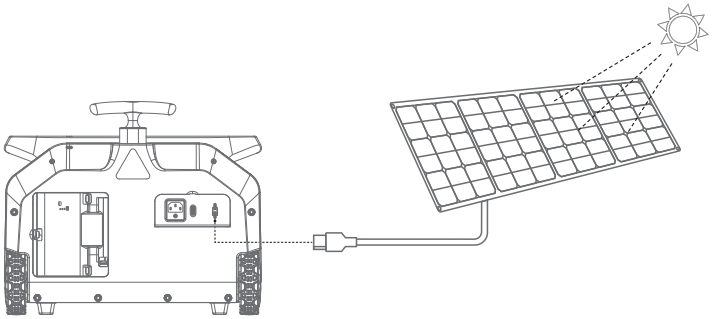

1. Place your solar panel where it will get as much strong direct sunlight as possible.
2. Connect the output port of the solar panel with the input port of the product to start charging. You will know the product is being charged when the icon on the LCD turns on. The product is fully charged when capacity level reaches 100% and the incon INPUT blinks.

⚠ ATTENTION:

1. The actual charging efficiency may vary widely depending on weather, ambient temperature, sunlight's strength, the angle that the solar panels face to the straight sunlight, and other factors.
2. Use solar panels below 80V for charging, it will automatically cut off when input higher than 82V.

2. Charge Through AC

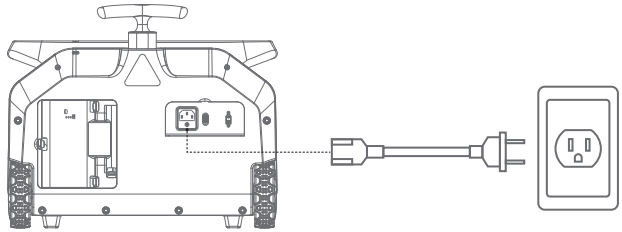

Connect the AC outlet and P3200's AC input port with the original AC charging cable, you will see the battery is in charging status and know the input power, the remaining charging time and the current battery power level.

⚠ATTENTION:

1. The battery is fully charged when the percentage of the battery is 100% and input power is 0 and remains still. After the battery is fully charged, it is best to unplug the charging cables. The battery will not overcharge, but removing the cables is the best way.
2. When charged by AC, it takes around 1.2–1.5 hours to be fully charged.

3. Charge Through Your Car

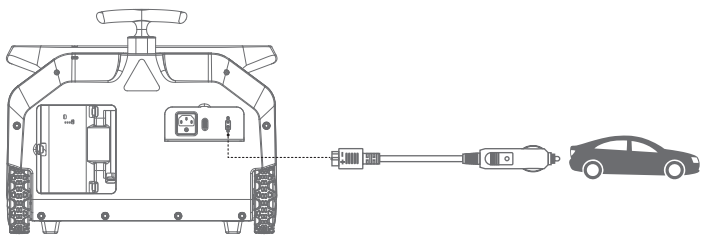

1. Plug the car charging cable provided with the battery into the cigarette lighter socket of your car. Then plug the another end of the cable into the DC input port of the battery.
2. The car charger cable provided with the battery has a 10A protection fuse to protect your car.
3. The screen will show input power and remaining recharging time while the battery is being charged.

⚠ATTENTION:

To avoid car battery power loss, you should charge this product through your car cigarette lighter socket only when your car engine is started. This function is for 12V/24V cars only.

Using Your Product

1. Button

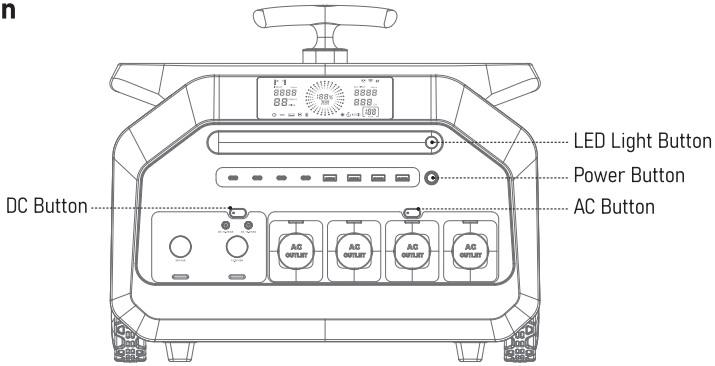

1. Power Button

1. Long press the power button for 3 seconds to turn the P3200 on/off.
2. This machine would automatically shut down after 10 minute's standby status, which prevents wasting its power.
3. After using, long press the power button for 3 seconds to shut down.

⚠ ATTENTION:

1. When the product is started, double-click the power button to turn on the AC automatic shutdown function, and the icon (AUTO) will light up at the same time. When the product is off, double-click the power button to turn off the AC automatic shutdown function, and the icon (AUTO) will disappear at the same time. When you need to use electrical appliances with intermittent power supply for a long time, please turn off the AC automatic shutdown function!!
2. When this icon (AUTO) lights up and the load on the AC interface is below 10W, the AC interface will shut down after 2 hours.

2. AC on/off Button

Short press the AC button to turn on the AC function (the AC icon will be displayed on the screen at the same time). Short press the AC button again to turn off the AC function.

⚠ ATTENTION:

Long press the AC button to enter Smart Power Mode; double-press the AC button 5 times consecutively to switch the device's AC output voltage; press and hold the AC+DC buttons simultaneously for 3 seconds to switch the device's AC output frequency.

3. DC on/off Button

Short press DC button to turn ON the DC output (DC output icon will be displayed on LCD). Short press DC button again to turn OFF the DC output.

⚠ ATTENTION:

Press and hold the DC button to display the software version of the device; Simultaneously pressing the DC+LED button light can reset the WIFI distribution network function.

4. LED Light Button

Short press " ☼ " to turn on/off the LED and adjust the brightness (50%, 100%), and turn on the SOS mode.

⚠ ATTENTION:

Long press the LED button to turn on/off the silent charging function.

2. USB Outputs Function

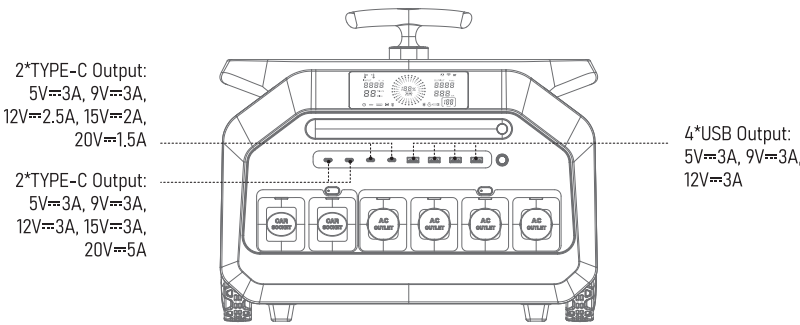

⚠ ATTENTION:

The above TYPE-C/USB output parameters are only single-channel output parameters. If simultaneously using TYPEC-1 and TYPEC-2/TYPEC-3 and USB-1/TYPEC-4 and USB-2/USB-3 and USB-4, the corresponding ports can only output 5V⎓3A. This configuration may affect the simultaneous use of high-power appliances, depending on the actual usage scenario.

Protection Mode (USB Output)

1. Overcurrent Protection: When USB output port is overloaded, please unplug the load and plug it back again, the product will return to normal.
2. Short-circuit Protection: When USB output port is short-circuited, please unplug the load and plug it back again, the product will return to normal.

3. DC Outputs Function

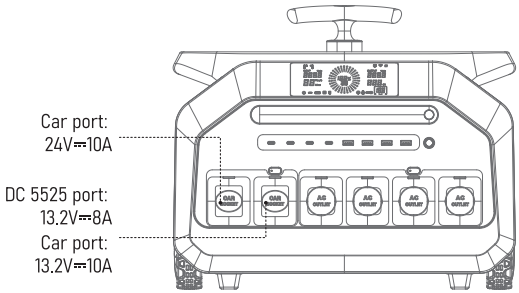

1. The two DC5525 (5.5 mm diameter) 13.2V ports with a maximum of 8A of current.
2. The DC5525 13.2V ports automatically distribute the current according to the externally connected devices to ensure the shortest charging times.
3. Each of the DC5525 ports can be connected with a cigarette lighter cable, however, the output will be limited to 120W maximum.
4. The output power of the left car port is limited to a maximum of 240W.

⚠ ATTENTION:

Protection mode (DC outputs)

1. Overcurrent protection: When the DC output port is overloaded, the DC icon on the screen will blink. Please remove the device, and then press the DC button to restore the product to normal.
2. Short-circuit Protection: When DC output ports are short-circuited, please remove the device, and then press the DC button to restore the product to normal.

4. AC Outputs Function

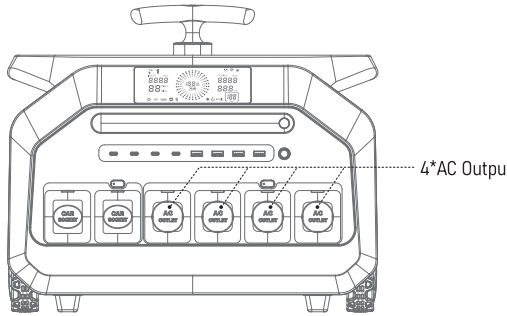

1. Plug the power cable of AC appliance into the AC outlet of the P3200. Press the AC power button to enter AC mode.
2. Make sure the power of the connected AC appliance is less than 3200W.

⚠ ATTENTION:

When battery voltage is below 44.8V, AC output function will be forced to shut down. It will return to normal after charging.

Protection Mode (AC Output):

A. This product is designed with under-voltage protection, overload protection, short-circuit protection and over-temperature protection. It's designed with double isolation circuit, which is safe, reliable and high efficient.

B. When overload, over-temperature or short-circuit happens, the AC icon will blink and the AC output function will be shut down automatically to make ensure safety.

Product Specifications

Battery	
Battery	$LiFePO_4$ Battery
Battery Capacity	2048Wh
Lifecycles	4000+ Cycles
Port	
USB-1/2/3/4 Output	30W 5V⎓3A 9V⎓3A 12V⎓3A
Type C-1/2 Output	100W 5V⎓3A 9V⎓3A 12V⎓3A 15V⎓3A 20V⎓5A
Type C-3/4 Output	30W 5V⎓3A 9V⎓3A 12V⎓2.5A 15V⎓2A 20V⎓1.5A
DC5525 Output	13.2V⎓8A
Car Output	13.2V⎓10A 24V⎓10A
AC Output	3200W Pure Sine Wave
Charging Port	AC-1800W Max input: 85V~130V 60Hz / 180V~264V 50Hz
	Car charging-120W; PV charging-1000W: 12V~60V; Max charging current: 20A
General	
Weight	24Kg
Dimensions	445x298x371mm
Operating Usage Temp	0~40°C(Charging), -15~+40°C(Discharging)
Display	LCD Screen

Product Error Code

Icon (blink)/Code(Display)	Error Cause
	Blink-Battery discharge over-temperature and charging over-temperature
	Blink-Battery discharge under-temperature and charging under-temperature
	Blink-Battery charging over-temperature caused by PV charging
	Blink-Battery charging over-temperature caused by grid charging
	Blink-Battery charging over-temperature caused by grid+PV charging
	Blink-PV charging failure caused by battery charging under-temperature
	Blink-AC charging failure caused by battery charging under-temperature
	Blink-Grid+PV charging failure caused by battery charging under-temperature
	Blink-Charging voltage or over-current is detected when PV charging
	Blink-Grid under-voltage, over/under-frequency, or grid charging over-current is detected when grid charging
	Blink-Type-C port is over-loaded or short-circuited
	Blink-USB port is over-loaded or short-circuited
E01	Inverter BUS soft start fault
E02	Inverter output short circuit fault
E03	Inverter BUS under-voltage fault

E04	Inverter BUS over-voltage fault
E05	Inverter BUS short circuit fault
E06	Inverter output over-current fault
E07	Inverter DC component too high fault
E08	Inverter over temperature fault
E09	Inverter discharge over-current fault
E10	Inverter charging over-current fault
E11	Inverter current sensor fault
E12	Inverter output over/under-voltage or over/under-frequency faults
E13	AC load short circuit
E14	Inverter main relay fault
E15	Inverter fan fault
E16	Inverter DSP and main-control MCU communication fault
E17	Active MCU and BMS communication fault

⚠ **ATTENTION**:

1. This product has an internal, non-removable, $LiFePO_4$ Rechargeable battery. Do not attempt to remove the battery, as you may damage the device.
2. The battery can be charged and discharged over 4000+ cycles.

Package Content

1. Power Station*1
2. AC charging cable*1
3. Solar charging cable*1
4. Car charging cable*1
5. User manual*1
6. Warranty card*1
7. 4-in-1 data cable*1 (Optional)
8. Jump-starter*1 (Optional)

Caution

1. Do not short-circuit the product. To avoid short-circuiting, keep the product away from all metal objects.
2. Do not heat the product, or dispose it in fire, water or other liquids. Keep it away from high ambient temperature. Do not expose the product to direct sunlight.
3. Keep the product away from humid, dusty places.
4. Do not disassemble or reassemble this product.
5. Do not drop, place heavy objects on, or allow a strong impact on this product.
6. This product is not intended to be used by persons with reduced physical, sensory or mental capabilities.
7. Please keep this product away from children.
8. Do not cover the product with towels, clothing and other items.
9. Do not overcharge this product.
10. When fully charged, disconnect the product from the power source immediately.
11. If you are not going to use this product for a long time, please fully charge it before storage
12. To charge some portable electronic devices, you may need to set those devices in charge mode first. Refer to the corresponding user manual of those devices for confirmation.

Cold Weather Usage

Cold temperatures(-20℃~-10℃)can affect the product's battery capacity due to the chemical characteristics of the battery. If you'll be living off grid in sub-zero conditions, it is recommended to keep your product in an insulated cooler, and connected to a power source (12V/24V car/wall outlet/solar panel). The natural heat generated by the product contained in an insulated cooler will keep battery capacity at its highest level.

Disposal And Recycle

This product should not be disposed along with household waste. Please dispose of or recycle this product and the battery inside according to the local rules and regulations.

Disclaimer

- Our company cannot be held liable for damages caused by fire, earthquake, used by a third party, other accidents, intentional misconduct on the part of the customer, abuse or other abnormal conditions.

- Do not repair any damage to the AC plug or power supply on your own.

- The warranty covers all terms and conditions of the warranty. Contents that are not specified in the warranty terms and conditions are beyond our responsibility.

- Our company assumes no liability for damages caused by incorrect use or non-compliance with this user manual.

Intended use:
A portable power station is intended as a power supply for electronic devices with a maximum power consumption of 3200W. Our product is not suitable to be used with equipment that relates to one's own personal safety and relies heavily on electricity, such as medical devices, equipment for nuclear facilities, the manufacture of air and spacecraft, etc. Therefore, we assume no liability for accidents involving personal safety, fires, or machine failures caused by using our product with the aforementioned devices.



Made in China